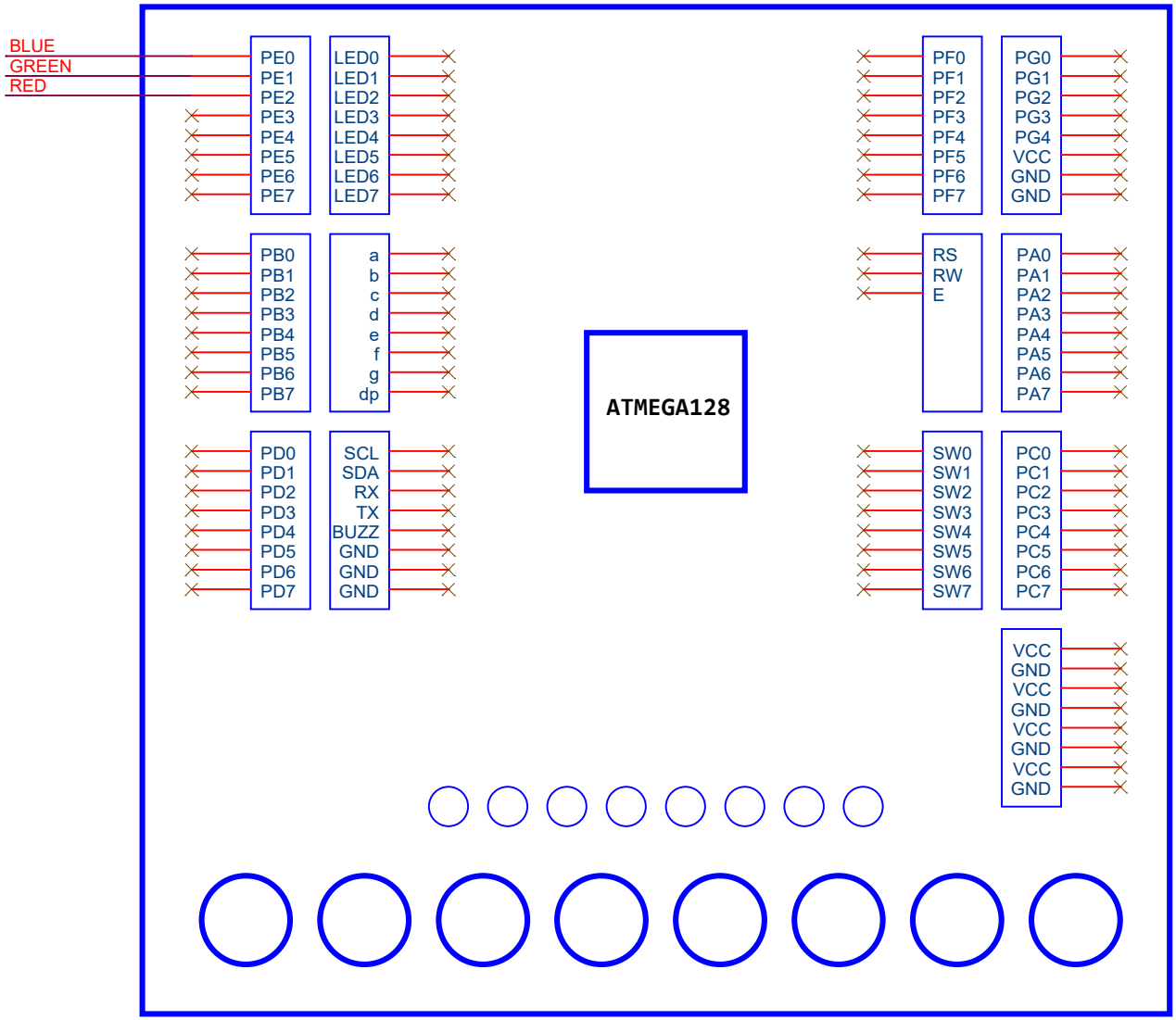


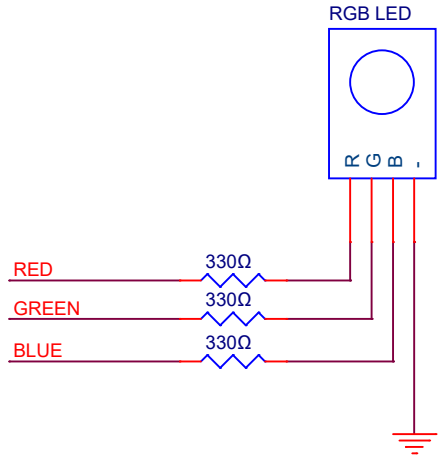


| | | | |
|---|---|---|---|
| Title | RGB LED test | | |
| Size Custom | Document Number <Doc> | | Rev <RevCod |
| Date: Tuesday, November 25, 2025 | | Sheet 0 of 26 | |